DATA SHEET

Type 8228
ELEMENT

Inductive conductivity meter

- Perfect for concentrated liquids and wide conductivity range
- Pre-parameterized versions available for direct start-up
- Integral device for direct connection to PLC
- Simulation of process values for diagnostics
- Sensor available in PP, PVDF or PEEK

Product variants described in the data sheet may differ from the product presentation and description.

Can be combined with

Type S020 ▸
Insertion fitting for flow or analytical measurement

Type 8611 ▸
eCONTROL - Universal controller

Type 8619 ▸
multiCELL - Multi-channel and multi-function transmitter/controller

Type 8693 ▸
Digital electropneumatic process controller for the integrated mounting on process control valves

Type 8802 ▸
ELEMENT continuous control valve systems - overview

Type description

Bürkert's inductive conductivity meter Type 8228 is designed for usage under harsh conditions in many industrial processes for measuring in concentrated liquids like acids, caustics or salt-solutions over a wide measuring range.

Applications like cooling water monitoring (i.e. dilution control), industrial water treatment or preparation and identification of cleaning liquids for example in CIP processes.

The device is available in two models:
- The first is the standard version with a G 2" process connection to be mount in Type S020 fitting
- The second is the CIP version with a Clamp 2" process connection according to ASME BPE (clamp 1.5" on request).

DTS 1000220089 EN Version: M Status: RL (released | freigegeben | validé) printed: 19.02.2021

© Christian Bürkert GmbH & Co. KG, Subject to alteration

Visit product website ▸

Table of contents

1. General technical data 4

2. Product versions 6

2.1. Standard version ... 6
2.2. CIP version ... 7

3. Approvals 7

3.1. Certification UL ... 7
3.2. Pressure Equipment Directive ... 7
Device used on a pipe ... 7
Device used on a vessel ... 7

4. Materials 8

4.1. Chemical Resistance Chart – Bürkert resistApp ... 8
4.2. Material specifications ... 8
Standard version ... 8
CIP version ... 8

5. Dimensions 9

5.1. Standard version ... 9
5.2. Standard version installed in a S020 fitting ... 9
5.3. CIP version ... 10

6. Performance specifications 11

6.1. Pressure temperature diagram ... 11

7. Product installation 11

7.1. Installation notes ... 11
Standard version ... 11
CIP version ... 11
7.2. Mounting options ... 12

8. Product operation 12

8.1. Measuring principle ... 12

9. Product design and assembly 13

9.1. Product assembly ... 13
Standard version ... 13
CIP version ... 13

10. Networking and combination with other Bürkert products 14

10.1. Combination with transmitter/controller and fitting ... 14
10.2. Combination with available S020 fittings DN ... 14

11. Ordering information 14

11.1. Bürkert eShop – Easy ordering and quick delivery ... 14
11.2. Recommendation regarding product selection ... 15
Standard version ... 15
CIP version ... 15
11.3. Bürkert product filter ... 15

DTS 1000220089 EN Version: M Status: RL (released | freigegeben | validé) printed: 19.02.2021

11.4. Ordering chart 16
Conductivity meter to be configured 16
Conductivity meter pre-configurated for direct start-up 17
11.5. Ordering chart accessories 17

DTS 1000220089 EN Version: M Status: RL (released | freigegeben | validé) printed: 19.02.2021

1. General technical data

Product properties	
Material	
Please make sure the device materials are compatible with the fluid you are using. Detailed information can be found in chapter "4.1. Chemical Resistance Chart – Bürkert resistApp" on page 8.	
Non wetted parts	
Housing	Stainless steel 316L, PPS
Cover	PC
Seal	EPDM, silicone
Screws	Stainless steel
Display	PC
Navigation Key	PBT
Fixed connector holder	Stainless steel 316L
Others	Depending on the device version. Detailed information can be found in chapter "2. Product versions" on page 6 and in chapter "4.2. Material specifications" on page 8.
Wetted parts	
Depending on the device version. Detailed information can be found in chapter "2. Product versions" on page 6 and in chapter "4.2. Material specifications" on page 8.	
Dimensions	Detailed information can be found in chapter "5. Dimensions" on page 9.
Compatibility	Depending on the device version. Detailed information can be found in chapter "2. Product versions" on page 6.
Pipe diameter	Depending on the device version. Detailed information can be found in chapter "2. Product versions" on page 6.
Temperature sensor	Integrated in the sensor
Temperature compensation	• None or • According to a predefined graph (NaCl, NaOH, HNO3 or H2SO4) or • According to a graph defined especially for your process
Conductivity measurement	
Measuring range	100 µS/cm…2 S/cm
Temperature measurement	
Measuring range	-15…+130 °C (+5…+266 °F)
Product accessories	
Display	Grey dot matrix 128 x 64 with backlighting
Performance data	
Conductivity measurement	
Measuring range resolution	0.1 µS/cm
Measurement deviation	±(2 % of the measured value+5 µS/cm)
Linearity	±2 %
Repeatability	±(0.2 % of the measured value+2 µS/cm)
Response time t90	From 3 s (without filter) to 40 s (with slow filter)
Temperature measurement	
Measuring range resolution	0.1 °C (0.18 °F)
Measurement deviation	±1 °C (1.8 °F)
4…20 mA output uncertainty	±1 % of range
Electrical data	
Operating voltage	12…36 V DC, ±10 % oscillation rate, filtered and regulated, Connection to main supply: permanent (through external SELV (Safety Extra Low Voltage) and LPS (Limited Power Source) power supply)
Power Source (not supplied)	Limited power source according to UL/EN 60950-1 standards or limited energy circuit according to UL/EN 61010-1 §9.4
Protection against DC polarity reversal	Yes
Power / Current consumption	• Without the consumption of the current outputs and the transistor outputs: max. 1 W (25 mA at 12 V DC; inrush current ~100 mA) • With the consumption of the current outputs and the transistor outputs: max. 40 W (max. 1 A for the transistor outputs)

DTS 1000220089 EN Version: M Status: RL (released | freigegeben | validé) printed: 19.02.2021

Output signal	The device is available with one transistor and one 4…20 mA analogue outputs (2 outputs meter) or with two transistor and two 4…20 mA analogue outputs (4 outputs meter) • Pulse (transistor): – Polarized – Configurable through wiring and through parameterizing as sourcing (PNP) or sinking (NPN) – NPN-output: 1…36 V DC, max. 700 mA (or 500 mA max. per transistor if both transistor outputs are wired) – PNP-output: V+ supply voltage, max. 700 mA (or 500 mA max. per transistor if both transistor outputs are wired) – Galvanic insulation and protected against overvoltage, polarity reversals and short circuit • Current (3-wire): – 4…20 mA configurable through wiring and through parameterizing as sourcing or sinking, – 22 mA to indicate a fault (can be parametered) – Loop impedance max.: 1100 Ω at 36 V DC; 610 Ω at 24 V DC; 100 Ω at 12 V DC – Response time (10…90 %): 150 ms (default value)
Voltage supply cable	Shielded cable, Ø 3…6.5 mm; max. 0.75 mm² cross section
Media data	
Temperature	With conductivity sensor in: • PP: 0…+80 °C (+32…+176 °F) • PVDF: -15…+100 °C (+5…+212 °F) • PEEK:-15…+130 °C (+5…+266 °F) For the standard version, temperature limits may depend on the material the S020 fitting used is made of. Refer to the relevant instruction manual and data sheet and detailed information can be found in chapter "6.1. Pressure temperature diagram" on page 11. If the temperature ranges given for the device and the fitting are different, use the most restrictive range.
Pressure	With conductivity sensor in: • PP: max. PN6 (87 PSI) • PVDF: max. PN6 (87 PSI) • PEEK: max. PN10 (145 PSI) For the standard version, pressure limits may depend on the material the S020 fitting used is made of. Refer to the relevant instruction manual and data sheet and detailed information can be found in chapter "6.1. Pressure temperature diagram" on page 11. If the pressure ranges given for the device and the fitting are different, use the most restrictive range
Process/Port connection & communication	
Process connection	
Standard version	G 2" for use with S020 Insertion fitting
CIP version	Clamp 2" according to ASME BPE (clamp 1.5" on request)
Electrical connection	For the device with: • 2 outputs meter (3-wire): 1 × 5 pin M12 male fixed connector • 4 outputs meter (3-wire): 1 × 5 pin M12 male + 1 × 5 pin M12 female fixed connectors
Approvals and Certificates	
Standards	
Protection class according to IEC/ EN 60529	IP65 and IP67 with M12 connectors plugged in and tightened and electronic module cover fully screwed down

DTS 1000220089 EN Version: M Status: RL (released | freigegeben | validé) printed: 19.02.2021

Directives	
CE directives	The applied standards, which verify conformity with the EU Directives, can be found on the EU Type Examination Certificate and/or the EU Declaration of conformity (if applicable)
Pressure equipment directives	Complying with Article 4, Paragraph 1 of 2014/68/EU directive Detailed information on the pressure equipment directive can be found in chapter "3.2. Pressure Equipment Directive" on page 7.
Certificates	• FDA-certificate (only for standard or CIP version with PEEK or PVDF sensor holder and EPDM or FKM seal) • ECR1935/2004 declaration (only for standard or CIP version with PEEK sensor holder and EPDM seal)
Certification	UL-Listed for USA and Canada
Environment and installation	
Ambient temperature	Operating and storage: -10…+60 °C (+14…+140 °F)
Relative air humidity	≤85 %, without condensation
Height above sea level	Max. 2000 m
Operating condition	Continuous
Equipment mobility	Fixed
Application range	Indoor and outdoor (protect the device against electromagnetic interference, ultraviolet rays and, when installed outdoors, against the effects of climatic conditions)
Installation category	Category I according to UL/EN 61010-1
Pollution degree	Degree 2 according to UL/EN 61010-1

2. Product versions

The device is available in two models:

- Standard version with a G 2" process connection to be mount in Type S020 fitting
- CIP version with a Clamp 2" process connection according to ASME BPE (clamp 1.5" on request)

2.1. Standard version

Product details	
Material	• Wetted parts: – Sensor holder in PP, PVDF or PEEK – Seal in FKM (standard) or EPDM (option) • Non wetted parts: – M12 fixed connectors in brass nickel plated – Nut in PC or in PPA (with PEEK sensor holder)
Compatibility	Any pipe from DN15…DN200 which are fitted with Bürkert S020 Insertion fitting. For the selection of the nominal diameter of the Insertion sensor-fittings, see **data sheet Type S020** ▶.
Pipe diameter	DN15…DN200

DTS 1000220089 EN Version: M Status: RL (released | freigegeben | validé) printed: 19.02.2021

2.2. CIP version

Product details	
Material	• Wetted parts: – Sensor holder in PEEK and stainless steel 316L (standard) or in PVDF and stainless steel 316L (on request) – Seal in EPDM (standard) or FKM (on request) • Non wetted parts: – M12 fixed connectors in stainless steel 316L – Process connection (clamp) in stainless steel 316L
Compatibility	Any pipe from DN32 which are fitted out with a clamp 2" according to ASME BPE as process connection for the device

3. Approvals

3.1. Certification UL

Certificate	Description
c UL us	**UL-Recognized for USA and Canada** Products are UL-certified products and comply also with the following standards: • UL 61010-1 • CAN/CSA-C22.2 No.61010-1

3.2. Pressure Equipment Directive

The device conforms to Article 4, Paragraph 1 of the Pressure Equipment Directive 2014/68/EU under the following conditions:

Device used on a pipe

Note:

- The data in the table is independent of the chemical compatibility of the material and the fluid.
- PS = maximum admissible pressure, DN = nominal diameter of the pipe

Type of fluid	Conditions
Fluid group 1, Article 4, Paragraph 1.c.i	DN ≤25
Fluid group 2, Article 4, Paragraph 1.c.i	DN ≤32 or PS*DN ≤1000
Fluid group 1, Article 4, Paragraph 1.c.ii	DN ≤25 or PS*DN ≤2000
Fluid group 2, Article 4, Paragraph 1.c.ii	DN ≤200 or PS ≤10 or PS*DN ≤5000

Device used on a vessel

Note:

- The data in the table is independent of the chemical compatibility of the material and the fluid.
- PS = maximum admissible pressure, V = vessel volume

Type of fluid	Conditions
Fluid group 1, Article 4, Paragraph 1.a.i	V>1 L and PS*V≤25 bar.L or PS≤200 bar
Fluid group 2, Article 4, Paragraph 1.a.i	V>1 L and PS*V≤50 bar.L or PS≤1000 bar
Fluid group 1, Article 4, Paragraph 1.a.ii	V>1 L and PS*V≤200 bar.L or PS≤500 bar
Fluid group 2, Article 4, Paragraph 1.a.ii	PS>10 bar and PS*V≤10000 bar.L or PS≤1000 bar

DTS 1000220089 EN Version: M Status: RL (released | freigegeben | validé) printed: 19.02.2021

4. Materials

4.1. Chemical Resistance Chart – Bürkert resistApp

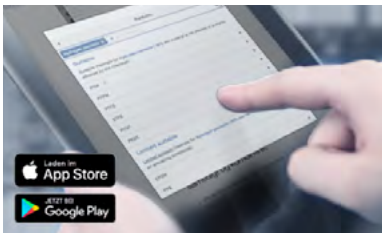

Bürkert resistApp – Chemical Resistance Chart

You want to ensure the reliability and durability of the materials in your individual application case? Verify your combination of media and materials on our website or in our resistApp.

Start Chemical Resistance Check

4.2. Material specifications

Standard version

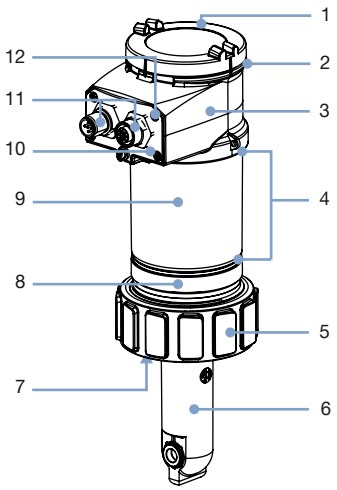

No.	Element	Material
1	Cover	PC
2	Seal	Silicone
3	Housing (top)	PPS
4	Seals	EPDM
5	Nut	PC or PPA (with PEEK sensor holder)
6	Sensor holder	PP, PVDF or PEEK
7	Seal	FKM (standard) or EPDM (option)
8	Housing (base)	PPS
9	Housing (body)	Stainless steel 316L
10	Fixed connector holder	Stainless steel 316L
11	M12 fixed connectors	Brass nickel plated
12	Screws	Stainless steel

CIP version

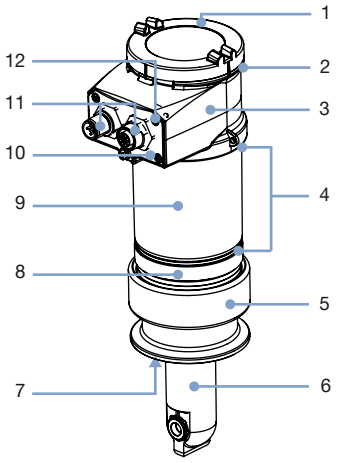

No.	Element	Material
1	Cover	PC
2	Seal	Silicone
3	Housing (top)	PPS
4	Seals	EPDM
5	Process connection (clamp)	Stainless steel 316L
6	Sensor holder	PEEK and stainless steel 316L (standard) or PVDF and stainless steel 316L (on request)
7	Seal	EPDM (standard) or FKM (on request)
8	Housing (base)	PPS
9	Housing (body)	Stainless steel 316L
10	Fixed connector holder	Stainless steel 316L
11	M12 fixed connectors	Brass nickel plated
12	Screws	Stainless steel

DTS 1000220089 EN Version: M Status: RL (released | freigegeben | validé) printed: 19.02.2021

5. Dimensions

5.1. Standard version

Note:
Specifications in mm

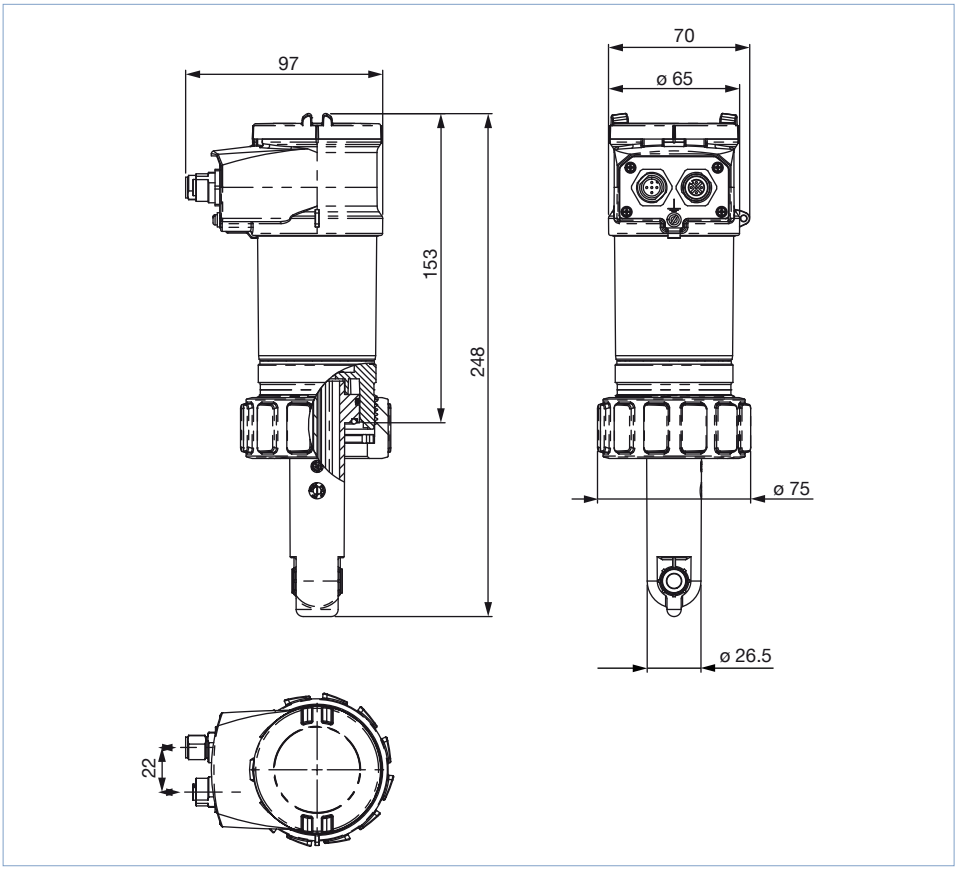

5.2. Standard version installed in a S020 fitting

Note:
Specifications in mm

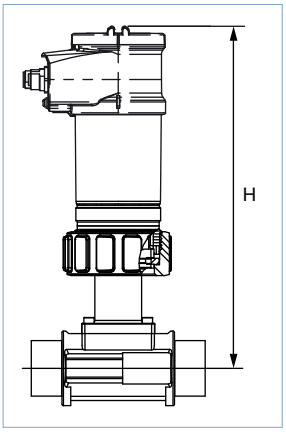

DN	H		
	T-Fitting	Plastic spigot	Metal spigot
15	235[1.)]	–	–
20	235[1.)]	–	–
25	235[1.)]	–	–
32	235	–	–
40	239	–	–
50	245	–	240
65	245	266[2.)]	246
80	–	266[2.)]	251
100	–	266[2.)]	261
125	–	301	272
150	–	308	283
200	–	329	304

1.) Only use plastic fitting in analytical version with true union acc. to DIN 8063 (PVC), to DIN 16962 (PP) or to ISO 10931 (PVDF)

2.) Using fusion spigot (Article no. 418652, 418660 or 418644 in PP, PVDF or PE) for orifice DN65…DN100.

DTS 1000220089 EN Version: M Status: RL (released | freigegeben | validé) printed: 19.02.2021

5.3. CIP version

Note:

- Specifications in mm
- Technical data for 1.5" clamp available on request

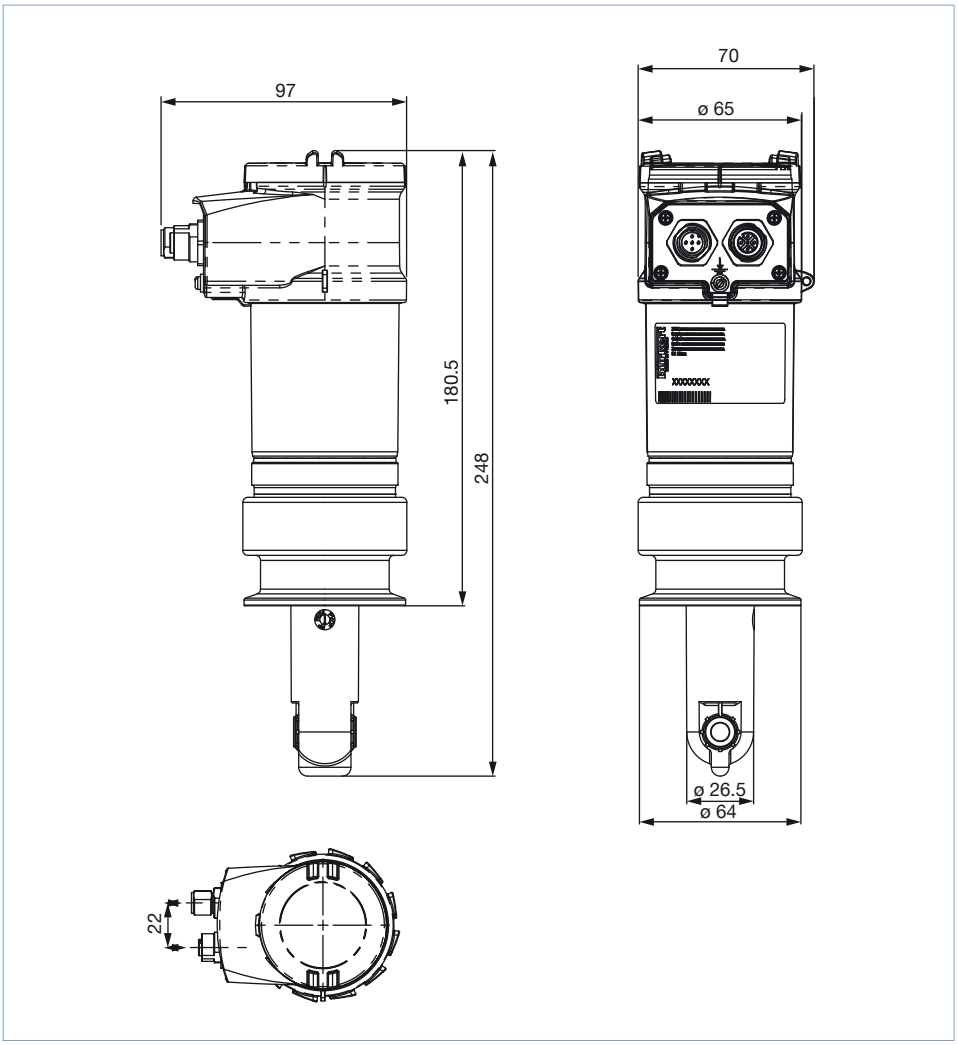

DTS 1000220089 EN Version: M Status: RL (released | freigegeben | validé) printed: 19.02.2021

6. Performance specifications

6.1. Pressure temperature diagram

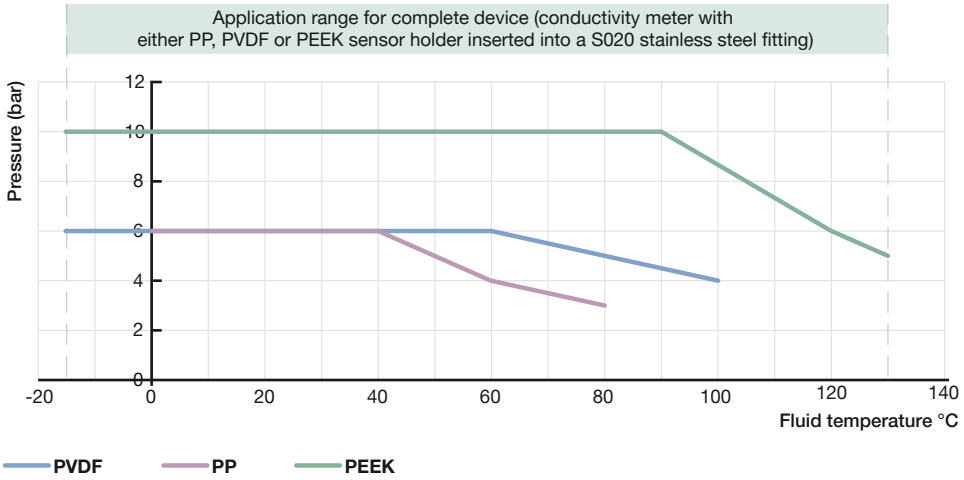

7. Product installation

7.1. Installation notes

Standard version

Note:
The conductivity meter Type 8228 can be installed into most of Bürkert Insertion fittings (Type S020).
Detailed information on the combination possibilities of the fittings can be found in chapter "10.2. Combination with available S020 fittings DN" on page 14.

See **data sheet Type S020** ▶ for more information.

Installation example	Description
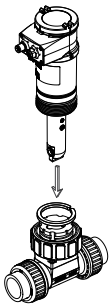	The 8228 conductivity meter is installed in the pipe together with a Bürkert insertion fitting (Type S020). Select and install the required fitting onto the pipe, according to specific requirements of the sensor and fitting material, temperature and pressure. Then cautiously install the unit on the fitting and tighten with the nut. Detailed information on the assembly can be found in chapter "9.1. Product assembly" on page 13.

CIP version

Installation example	Installation example
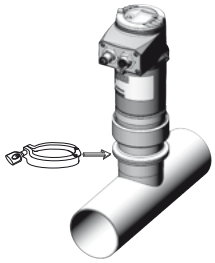	Mount the device in a stainless steel pipe of min. DN32 which is fitted out with a clamp 2" according to ASME BPE as process connection for the device and carefully positioning it as shown opposite. The electrical connection have to be parallel with the pipe.

DTS 1000220089 EN Version: M Status: RL (released | freigegeben | validé) printed: 19.02.2021

7.2. Mounting options

Note:

- In order to get a reliable measurement, air bubbles must be avoided and the mounting location must ensure that the electrode is continuously and completely immersed in the flow stream.
- The transmitter must be protected from constant heat radiation and other environmental influences, such as direct exposure to sunlight.
- The sensor can be installed in any position.
- The drawing shows the assembly with a standard version of the conductivity meter, but this also applies to the CIP version.

Assembly 1	Assembly 2
Device used on a pipe	**Device used on a tank**
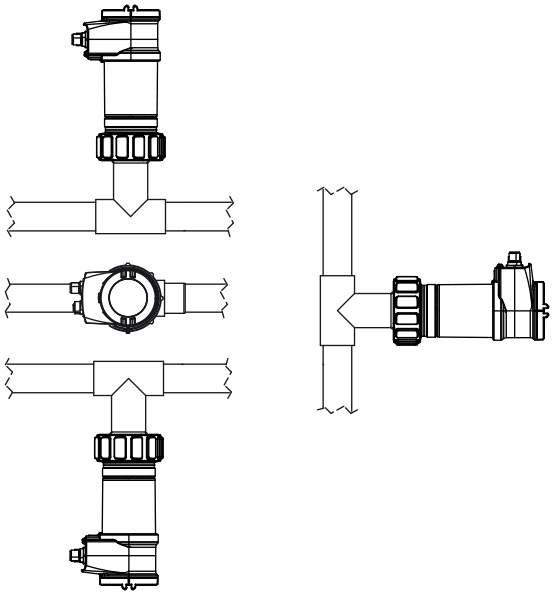	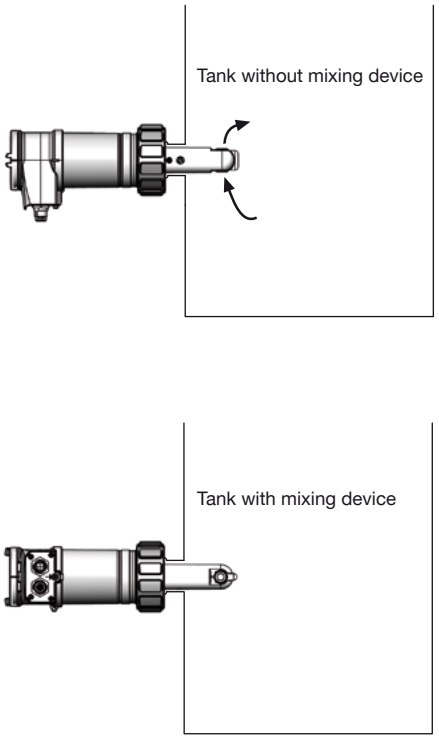

8. Product operation

8.1. Measuring principle

Conductivity is defined by the property of a solution to conduct electrical current. The charge carriers are ions (e.g. dissolved salts or acids).

In the simplest case the measurement cell consists of two metal electrodes which are set at a fixed distance apart and with a known specified surface. An AC voltage source is connected to the primary magnetic coil according to Lenz-Faradays law. The magnetic field induced generates a current in the secondary magnetic coil. The measured current is a direct function of the quantity of ions contained in the solution, and with help of Ohm's law the conductivity is calculated.

Several temperature compensation modes are available and can be chosen to satisfy the needs for the different applications. The integrated transmitter module converts the measured signals (conductivity and temperature) into common values, monitors limit values, displays different values in different physical units via the optional display module (if mounted) and computes the output signals.

Depending on the variant the 8228 compact device is available with each one transistor and one 4…20 mA analogue outputs (1 x M12) or with each two transistor and two 4…20 mA analogue outputs (2 x M12). The 4…20 mA standard output signal is proportional to the conductivity and/or to the temperature of the fluid.
The conductivity meter is a three-wire device and requires a power supply of 12…36 V DC.

DTS 1000220089 EN Version: M Status: RL (released | freigegeben | validé) printed: 19.02.2021

9. Product design and assembly

9.1. Product assembly

The conductivity meter Type 8228 consists of a sensor, plugged-in and pined to an enclosure with cover, containing the transmitter module and a removable display. The sensor cell consists of a pair of magnetic coils (called primary and secondary) in a PP, PVDF or PEEK holder. The integrated temperature probe (without direct contact to the fluid) for automatic compensation is a standard feature in the conductivity sensor holder.
The conductivity meter can operate independent of the display but it will be required for parameterize the device (i.e. selection of sensor cell constant, language, measuring range, engineering units, calibration…) and also for visualizing continuously the measured and processed data.

Standard version

Note:
The S020 Insertion fitting ensures simple installation of the conductivity meter into pipes from DN15…DN200.

See **data sheet Type S020** ▸ for more information.

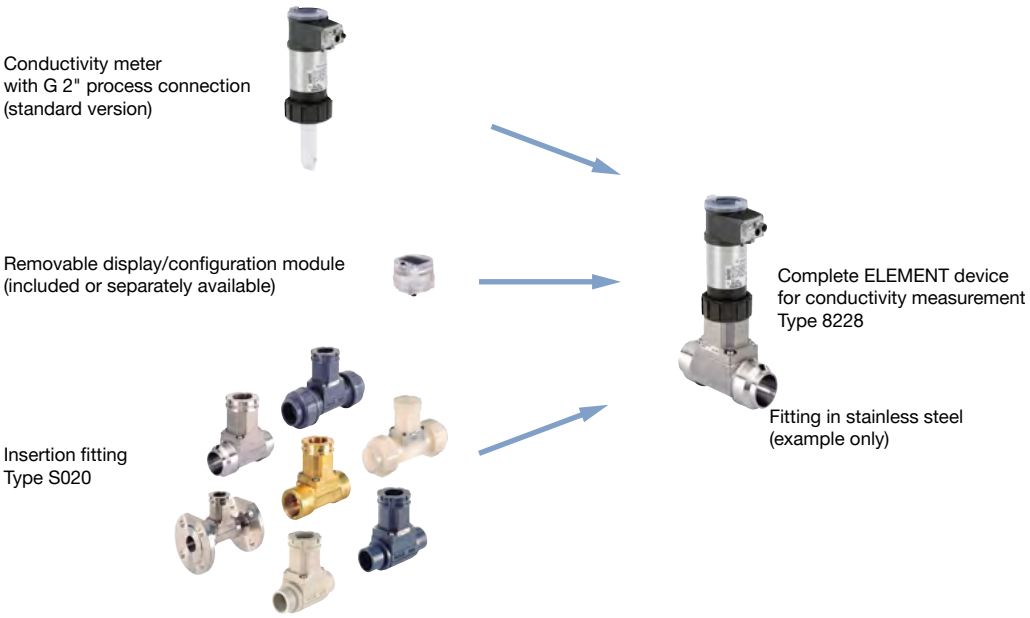

CIP version

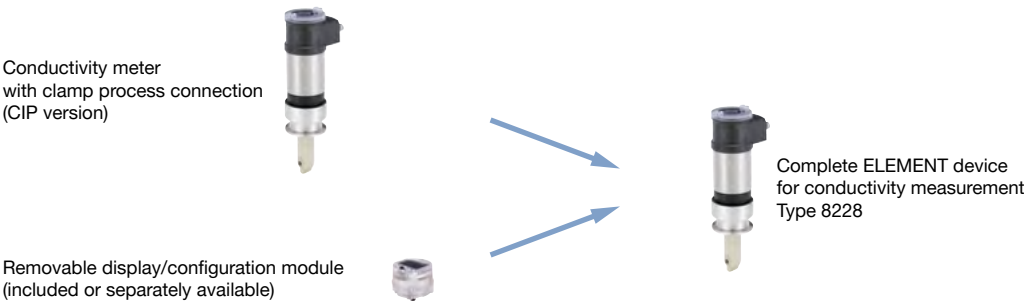

DTS 1000220089 EN Version: M Status: RL (released | freigegeben | validé) printed: 19.02.2021

10. Networking and combination with other Bürkert products

10.1. Combination with transmitter/controller and fitting

Example:

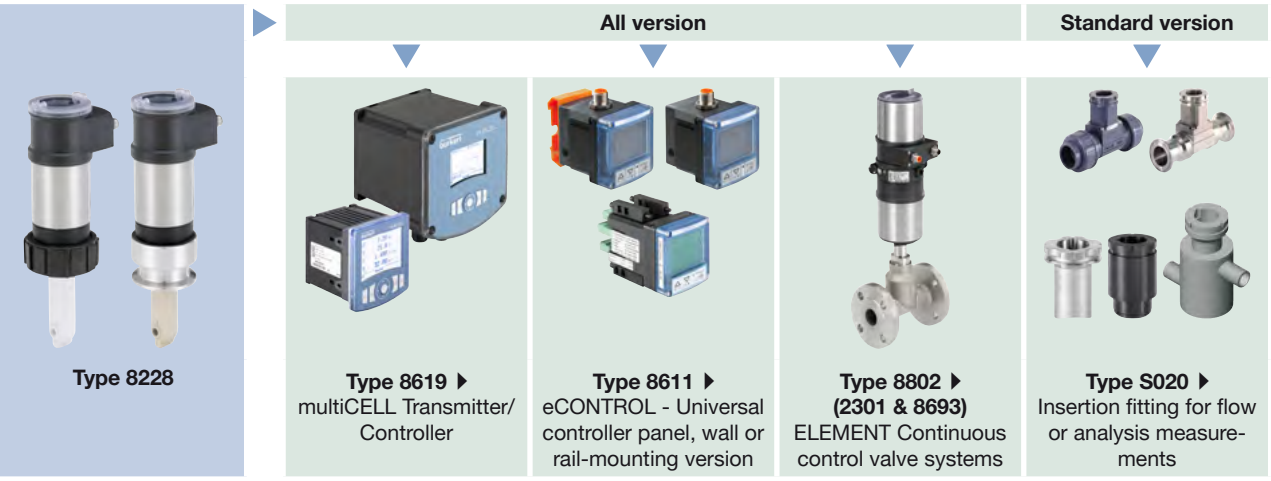

10.2. Combination with available S020 fittings DN

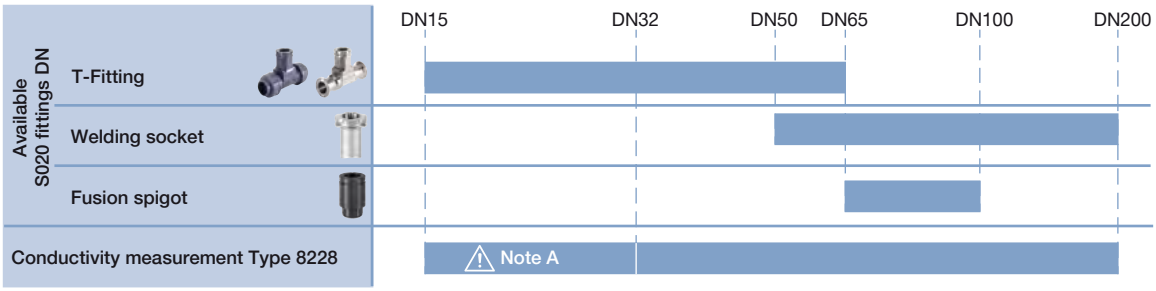

Note A: Only use plastic fitting in analytical version with true union acc. to DIN 8063 (PVC), to DIN 16962 (PP) or to ISO 10931 (PVDF).

See **data sheet Type S020** ▸ for more information.

11. Ordering information

11.1. Bürkert eShop – Easy ordering and quick delivery

Bürkert eShop – Easy ordering and fast delivery

You want to find your desired Bürkert product or spare part quickly and order directly? Our online shop is available for you 24/7. Sign up and enjoy all the benefits.

Order online now

DTS 1000220089 EN Version: M Status: RL (released | freigegeben | validé) printed: 19.02.2021

11.2. Recommendation regarding product selection

Standard version

Note:

- A complete compact ELEMENT conductivity meter Type 8228 consists of a compact 8228 ELEMENT conductivity meter, a removable display/configuration module and a Bürkert Insertion fitting Type S020.
- When you order devices without display/configuration module, please take care that you also order at least one display/configuration module for parameterizing the device (see chapter "11.5. Ordering chart accessories" on page 17) or order a pre-configured device (see chapter "11.4. Ordering chart" on page 16).

See **data sheet Type S020** ▸ for more information.

Two or three different components must be ordered in order to select a complete device. The following information is required:

- **Article no.** of the desired conductivity sensor **Type 8228** available with or without display/configuration module (see chapter "11.4. Ordering chart" on page 16)
- **Article no.** of the removable display/configuration module, if necessary (see chapter "11.5. Ordering chart accessories" on page 17).
- **Article no.** of the selected Insertion fitting **Type S020** (DN15…DN200)

CIP version

Note:

- A complete compact ELEMENT conductivity meter Type 8228 consists of a compact 8228 ELEMENT conductivity meter and a removable display/configuration module.
- When you order devices without display/configuration module, please take care that you also order at least one display/configuration module for parameterizing the device (see chapter "11.5. Ordering chart accessories" on page 17).

One or two different components must be ordered in order to select a complete device. The following information is required:

- **Article no.** of the desired conductivity sensor **Type 8228** available with or without display/configuration module (see chapter "11.4. Ordering chart" on page 16)
- **Article no.** of the removable display/configuration module, if necessary (see chapter "11.5. Ordering chart accessories" on page 17).

11.3. Bürkert product filter

Bürkert product filter – Get quickly to the right product

You want to select products comfortably based on your technical requirements?
Use the Bürkert product filter and find suitable articles for your application quickly and easily.

Try out our product filter

DTS 1000220089 EN Version: M Status: RL (released | freigegeben | validé) printed: 19.02.2021

11.4. Ordering chart

Conductivity meter to be configured

Note:

- All settings and digital output can be adjusted with the optional available display module.
- All following article no. have a transparent cover as standard.

Operating voltage	Output	Materials		UL certification	Electrical connection	Article no.	
		Sensor holder	Sensor seal			Without display	With display
Standard version (with G 2" process connection)							
12…36 V DC	1 x transistor NPN/PNP +1 x 4…20 mA	PP	FKM[1.)]	–	5 pin M12 male fixed connector	565601	566601
				UL-Recognized		565611	566611
		PVDF		–		565603	566603
				UL-Recognized		565613	566613
		PEEK		–		565605	566605
				UL-Recognized		565615	566615
	2 x transistors NPN/PNP +2 x 4…20 mA	PP		–	5 pin M12 male and 5 pin M12 female fixed connectors	565602	566602
				UL-Recognized		565612	566612
		PVDF		–		565604	566604
				UL-Recognized		565614	566614
		PEEK		–		565606	566606
				UL-Recognized		565616	566616
CIP version (with clamp 2" process connection according to ASME BPE)							
12…36 V DC	1 x transistor NPN/PNP + 1 x 4…20 mA	PEEK	EPDM[2.)]	–	5 pin M12 male fixed connector	567200	567478
				UL-Recognized		567480	567482
	2 x transistors NPN/PNP + 2 x 4…20 mA			–	5 pin M12 male and 5 pin M12 female fixed connectors	567199	567479
				UL-Recognized		567481	567483

1.) FKM seal in standard; 1 set including a green FKM and a black EPDM seals for the sensor, is supplied with each conductivity meter

2.) FKM on request

Further versions on request

	Material For version with clamp process connection PVDF sensor holder FKM seal		**Process connection** Clamp 1½"

DTS 1000220089 EN Version: M Status: RL (released | freigegeben | validé) printed: 19.02.2021

Conductivity meter pre-configurated for direct start-up

Note:

- Reduction of the installation afford because of pre-parametrized variants for direct start-up.
- Default setting: without filtering, temperature compensation linear 2 %/°C, 1 analogue output in sink mode and 1 digital output (Transistor: not assigned)
- All following article no. have an opaque cover as standard.

Operating voltage	Conductivity range (4…20 mA output corresponding..)	Materials		UL certification	Electrical connection	Article no.
		Sensor holder	Sensor seal			Without display
Standard version (with G 2" process connection)						
12…36 V DC	0…1 mS/cm	PP	FKM[1.)]	–	5 pin M12 male fixed connector	566560
	0…10 mS/cm					566561
	0…100 mS/cm					566562
	0…1 S/cm					566563
	0…1 mS/cm	PVDF				566564
	0…10 mS/cm					566565
	0…100 mS/cm					566566
	0…1 S/cm					566567
	0…1 mS/cm	PEEK				566568
	0…10 mS/cm					566569
	0…100 mS/cm					566570
	0…1 S/cm					566571

1.) FKM seal in standard; 1 set including a green FKM and a black EPDM seals for the sensor, is supplied with each conductivity meter

Further versions on request

Additional
Configurations: 2- or 4- outputs, Filter, Temperature compensation, Threshold, etc.

Process connection
Clamp 1½", 2"

11.5. Ordering chart accessories

Description	Article no.
Removable display/configuration module (with instruction sheet)	559168
Opaque cover with seal (1 screw cover with EPDM seal + 1 quarter turn closing cover with silicone seal)	560948
Transparent cover with seal (1 screw cover with EPDM seal + 1 quarter turn closing cover with silicone seal)	561843
Mounting ring (open) for S020 fitting	619205
PC - nut for S020 fitting	619204
Buffer solution, 300 ml, 706 µS/cm	440018
Buffer solution, 300 ml, 1413 µS/cm	440019
Buffer solution, 300 ml, 100 mS/cm	440020
5 pin M12 female straight cable plug with plastic threaded locking ring, to be wired	917116
5 pin M12 male straight cable plug with plastic threaded locking ring, to be wired	560946
5 pin M12 female straight cable plug moulded on cable (2 m, shielded)	438680
5 pin M12 male straight cable plug moulded on cable (2 m, shielded)	559177

DTS 1000220089 EN Version: M Status: RL (released | freigegeben | validé) printed: 19.02.2021

Bürkert – Close to You

For up-to-date addresses
please visit us at
www.burkert.com

DTS 1000220089 EN Version: M Status: RL (released | freigegeben | validé) printed: 19.02.2021

Credits, © and concept: Christian Bürkert GmbH & Co. KG | Photographs: Marc Eggimann Fotografie - 4051 Basel | Scanner GmbH - Werbeagentur Künzelsau - 74653 Künzelsau